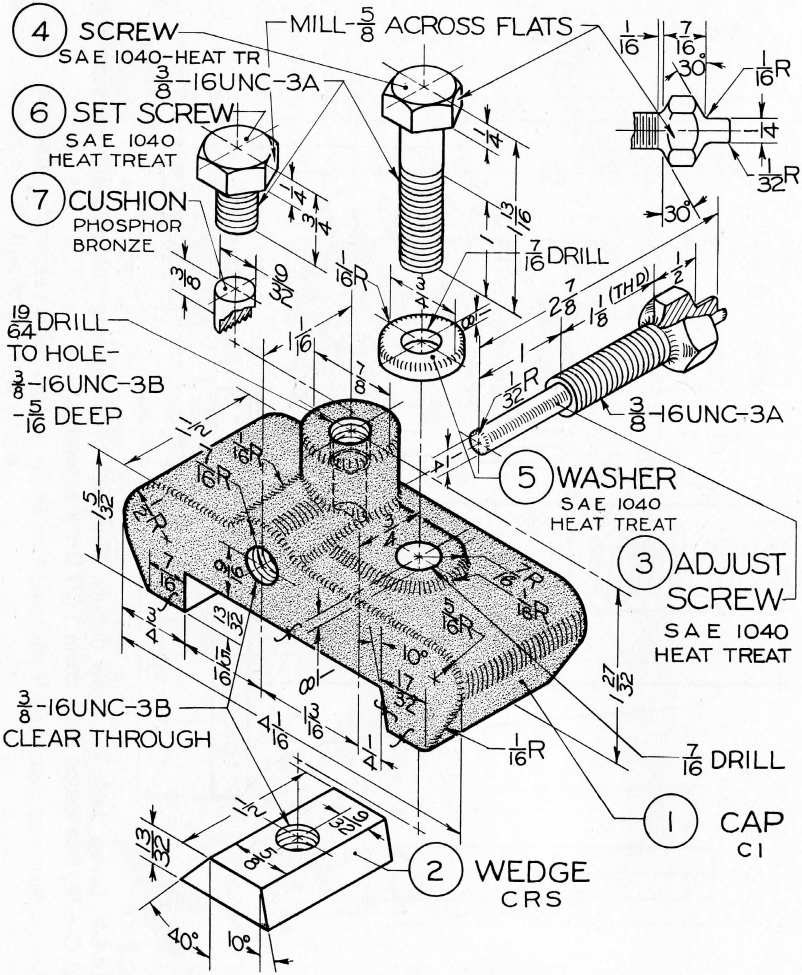

Fig. 14-65 Clamp Stop. (1) Draw details. (2) Draw assembly.