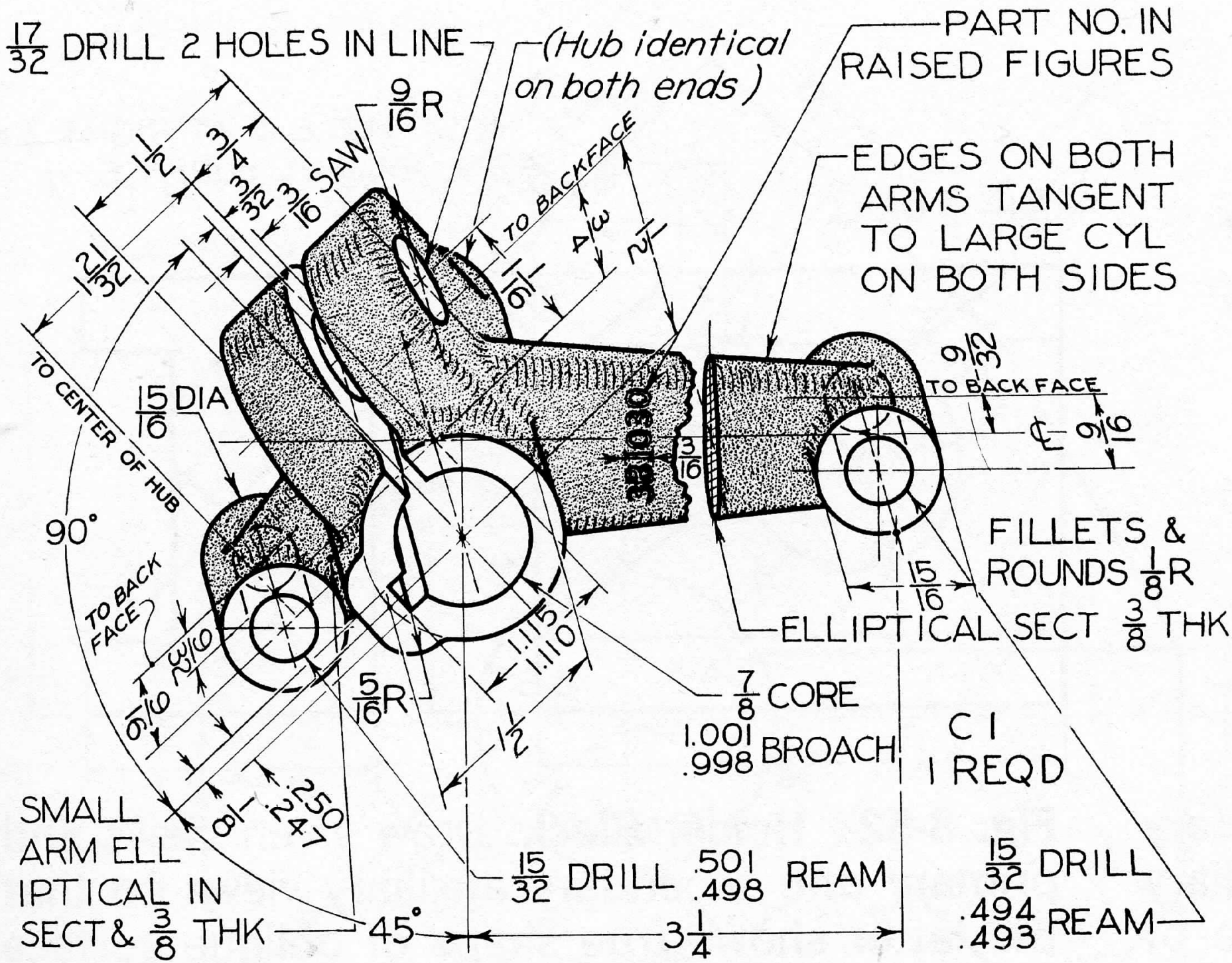

Fig. 8-46 Brake Control Lever. Draw necessary views and partial views (Layout B–4).

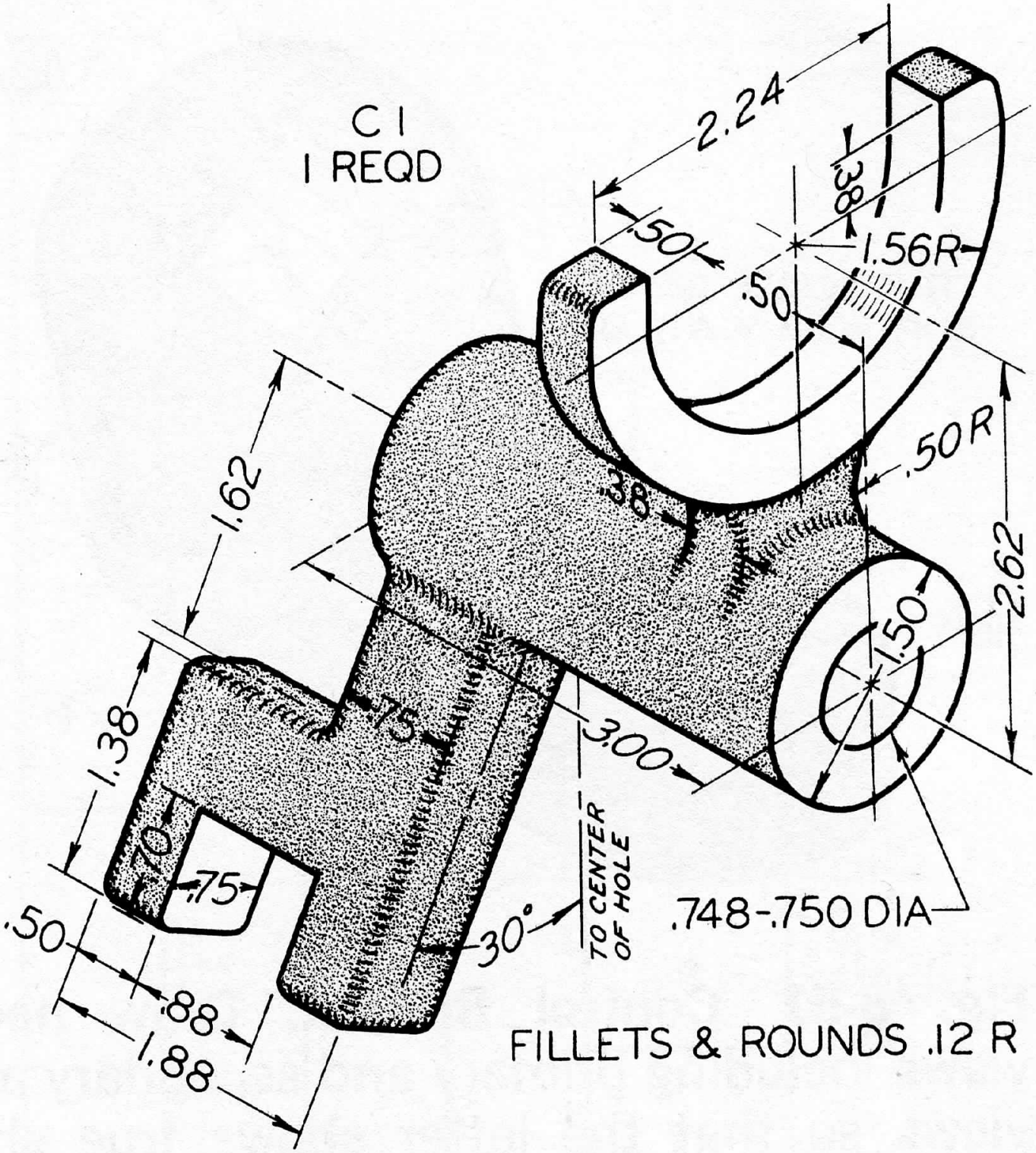

Fig. 8-47 Shifter Fork. Draw necessary views, including partial auxiliary view showing true shape of inclined arm (Layout B–4).

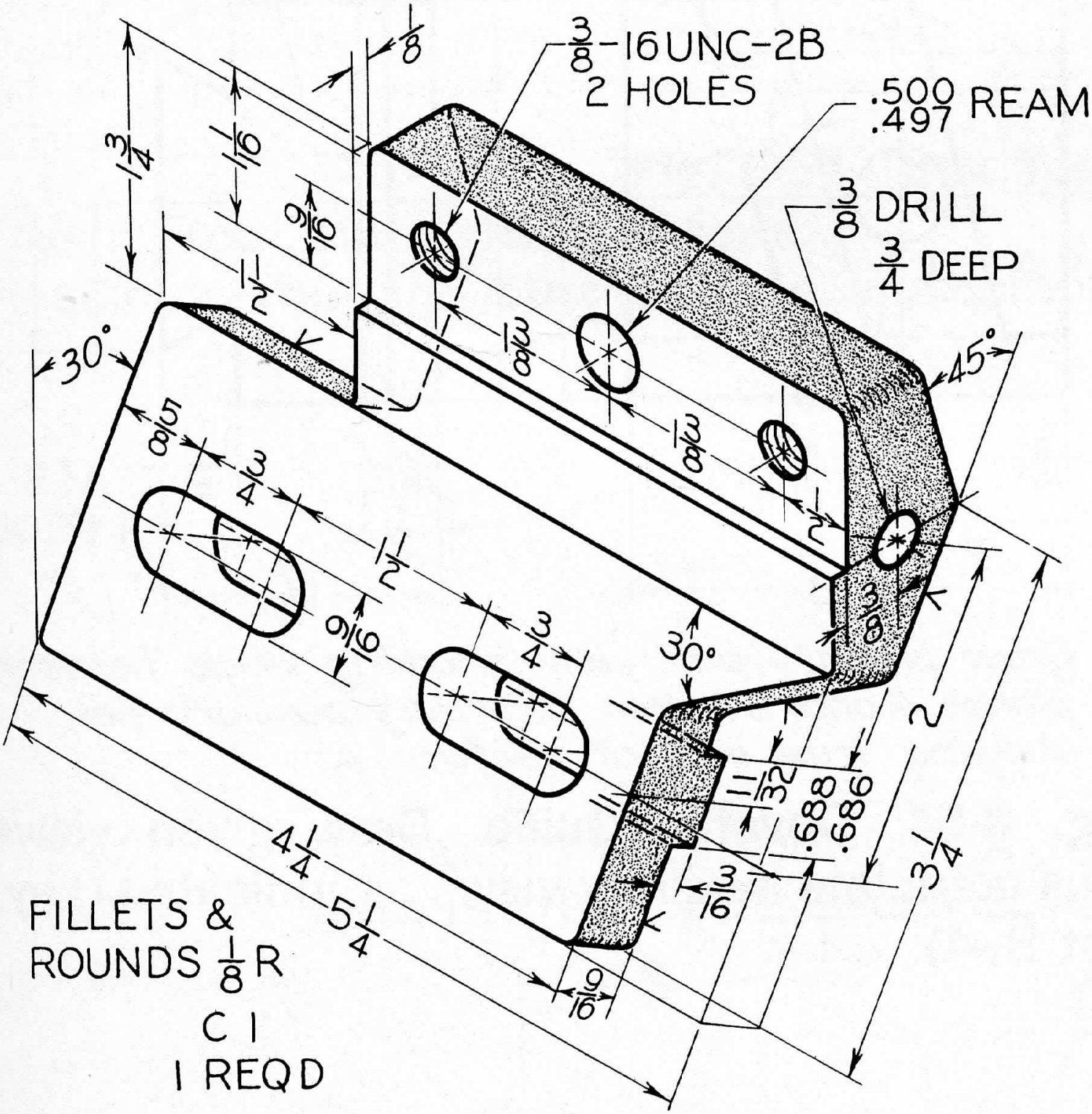

Fig. 8-48 Cam Bracket. Draw necessary views or partial views as needed. For threads, see §§13.15 and 13.16 (Layout B–4).

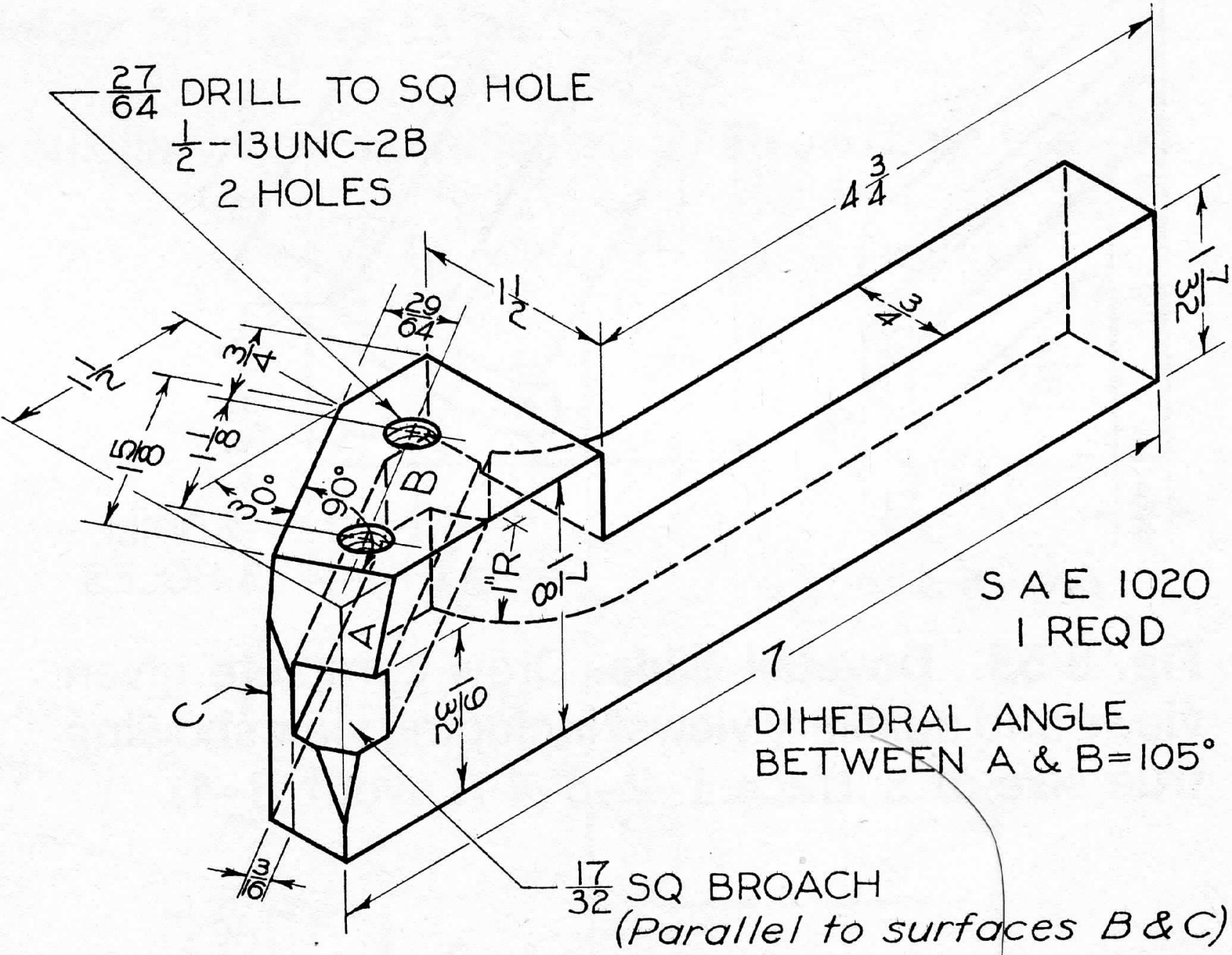

Fig. 8-49 RH Tool Holder. Draw necessary views, including partial auxiliary views showing 105° angle and square hole true size. For threads, see §§13.15 and 13.16 (Layout B–4).