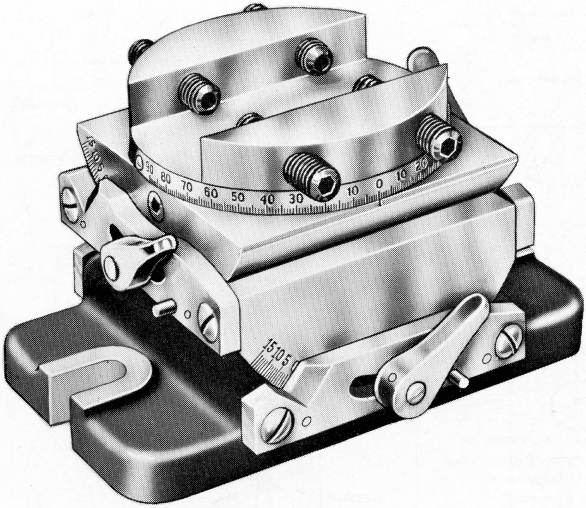

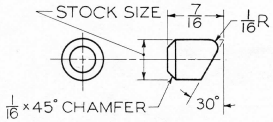

(10) CLAMP PLUG
5/16 BRASS ROD-2 REQD

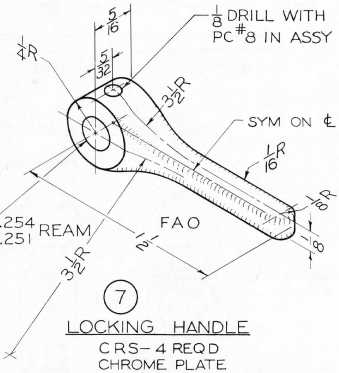

(7) LOCKING HANDLE
CRS-4 REQD
CHROME PLATE

NO. REQD	STANDARD PARTS
4 -	3/8-16UNC-2A x 1 1/2 HEX SOCKET CUP PT SET SCR
2 -	3/8-16UNC-2A x 9/16 HEX SOCKET FLAT PT SET SCR
8 -	1/4-20UNC-2A x 5/8 FILLISTER HD CAP SCR
12 -	1/8 x 3/4 DRILL ROD
2 -	#4 (.112)-40UNC-2A x 1/4 ROUND HD MACH SCR
4 -	1/8 x 3/16 DRILL ROD

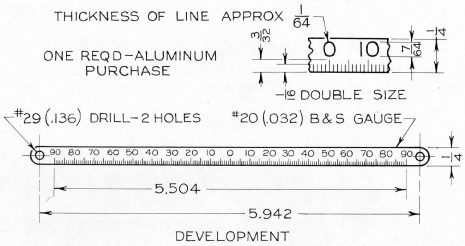

(9) PROTRACTOR SCALE

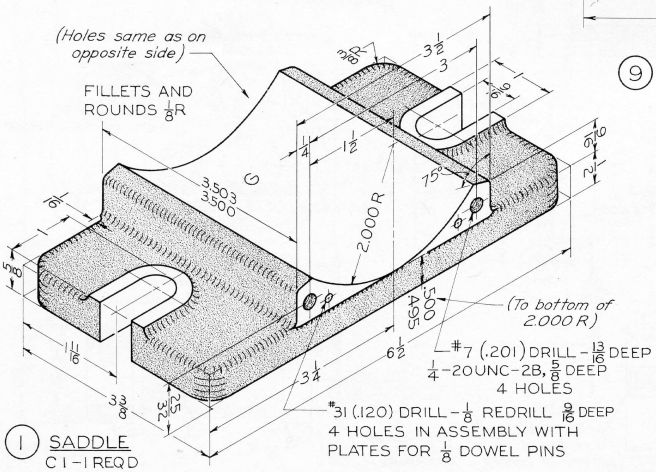

(1) SADDLE
C1-1 REQD

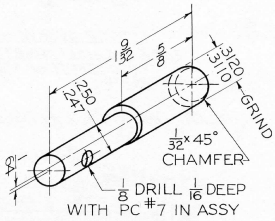

(8) ECCENTRIC
5/16 CRS #1112-4 REQD
CYANIDE HARDEN

Fig. 14-104 "Any-Angle" Tool Vise. (1) Draw details using decimal dimensions, if assigned. (2) Draw assembly. (See also Fig. 14-105.)

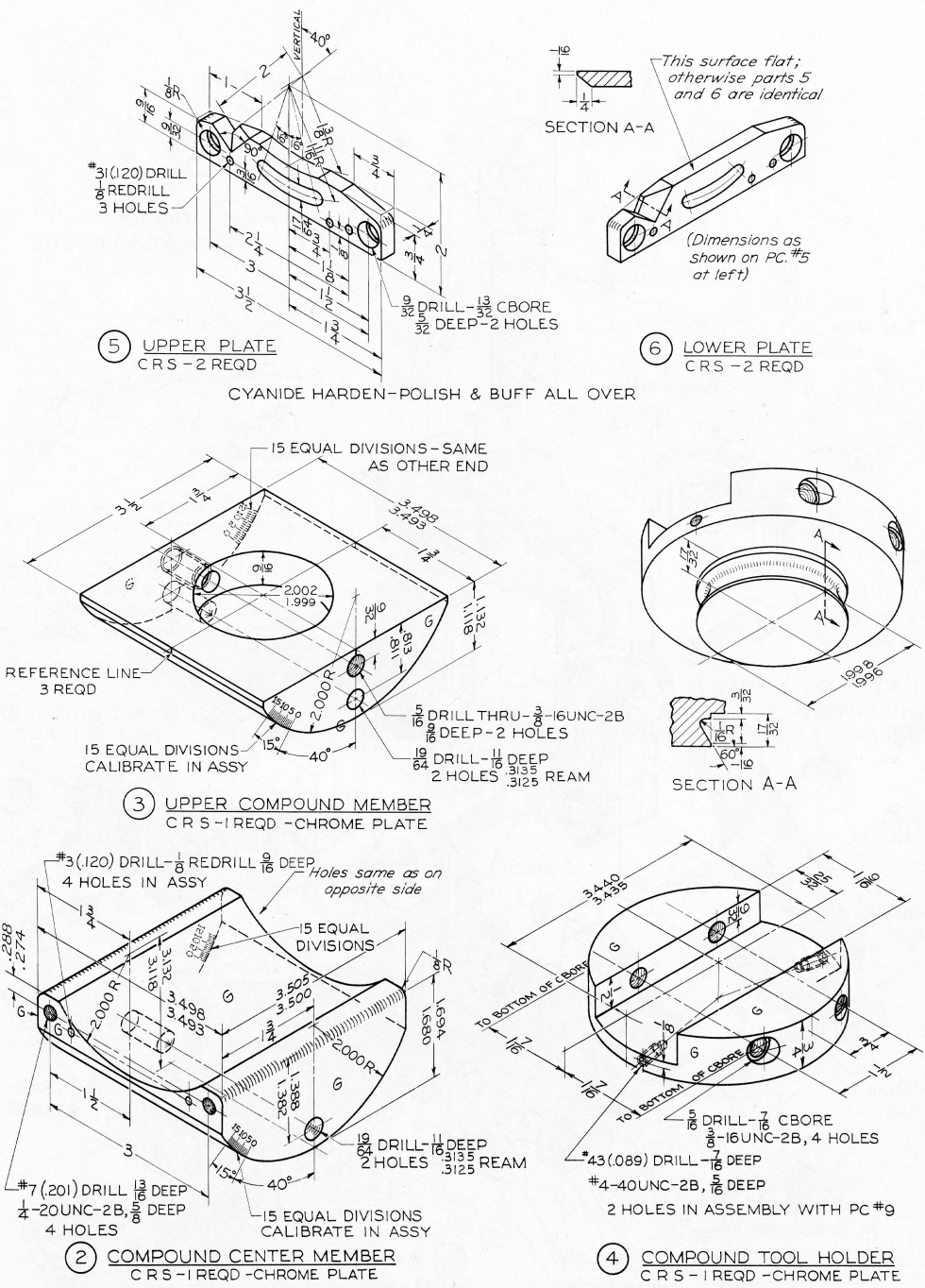

Fig. 14-105 "Any-Angle" Tool Vise (Continued). See Fig. 14-104 for instructions.