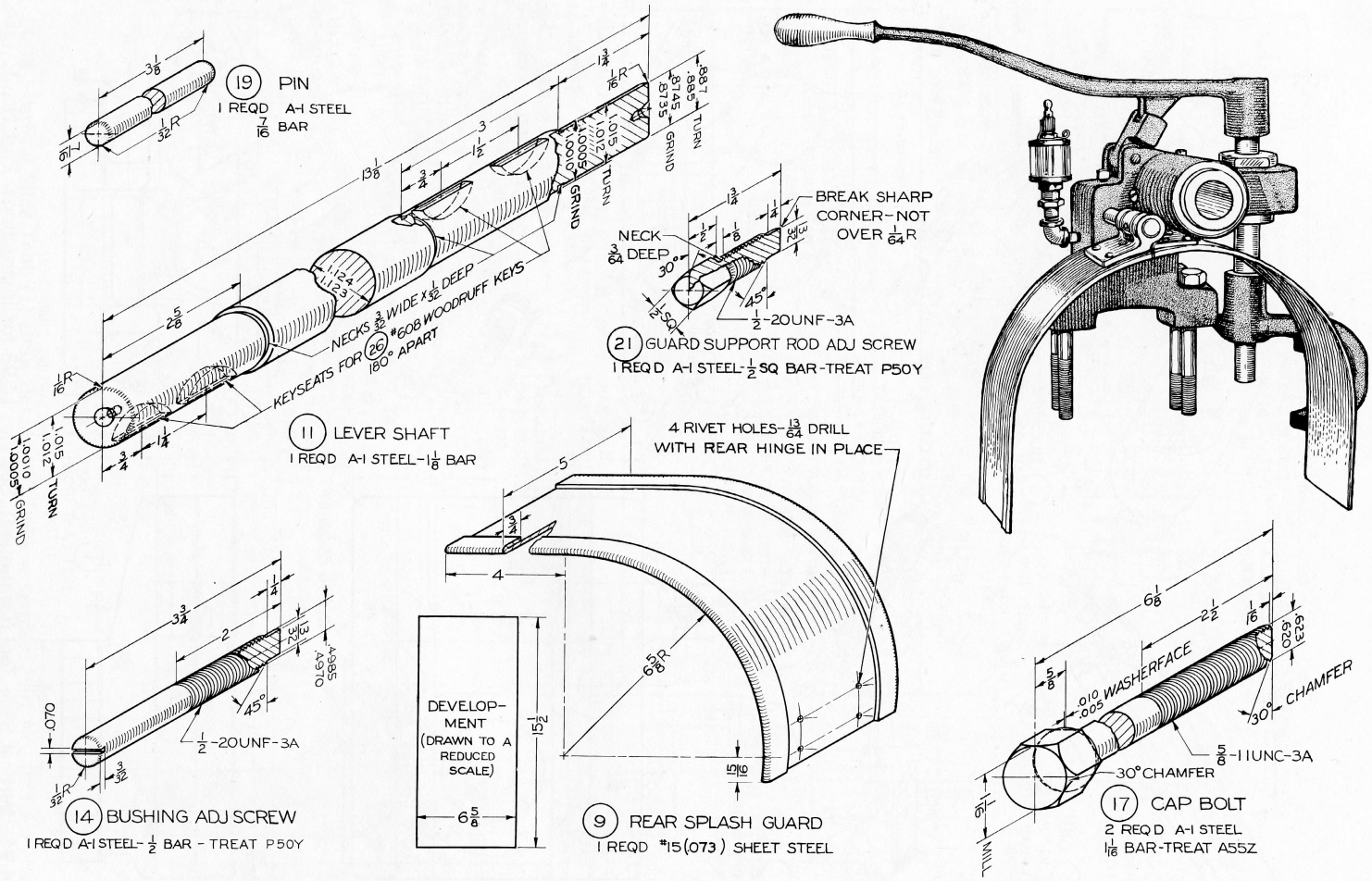

Fig. 14-95 Overhead Pilot Attachment. (1) Draw details. (2) Draw assembly. (See also Figs. 14-96 through 14-98.) If assigned, use unidirectional decimal dimensions.

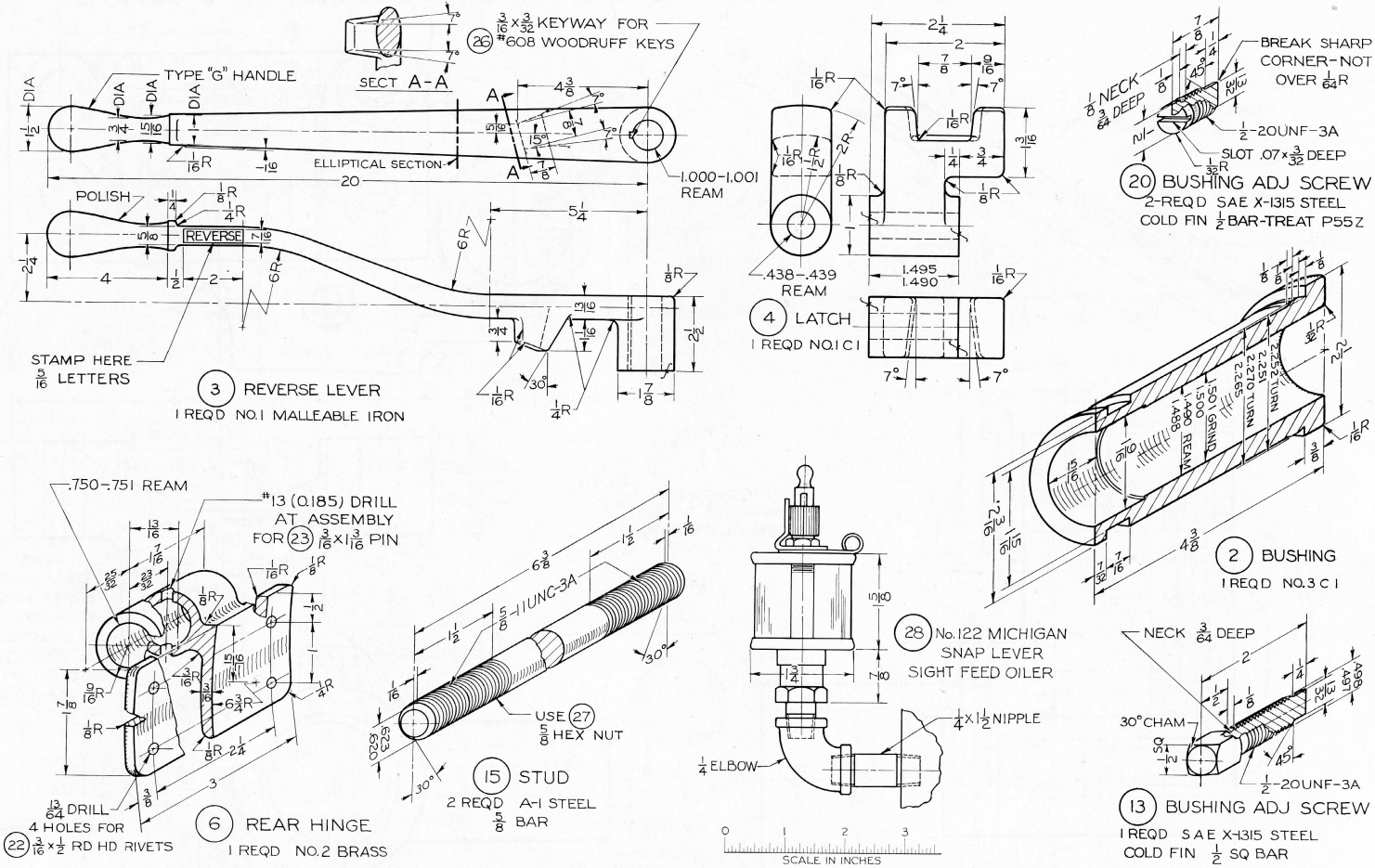

Fig. 14-96 Overhead Pilot Attachment (Continued). See Fig. 14-95 for instructions. Draw details. Part No. 4: Draw front, top, and right-side views.

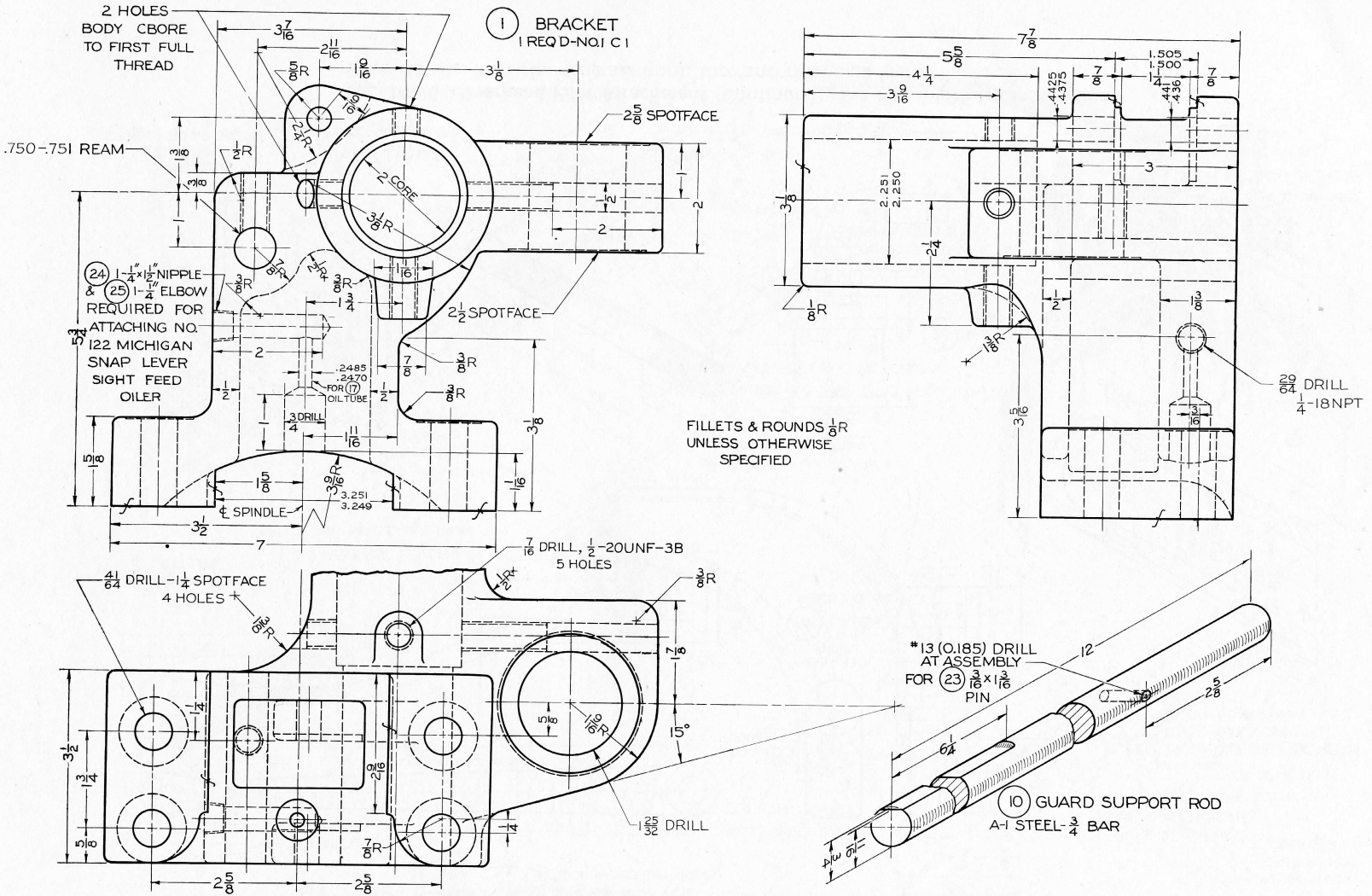

Fig. 14-97 Overhead Pilot Attachment (Continued). See Fig. 14-95 for instructions. Part No. 1: Draw present front view and add top and left-side views, omitting present right-side view and partial bottom view.

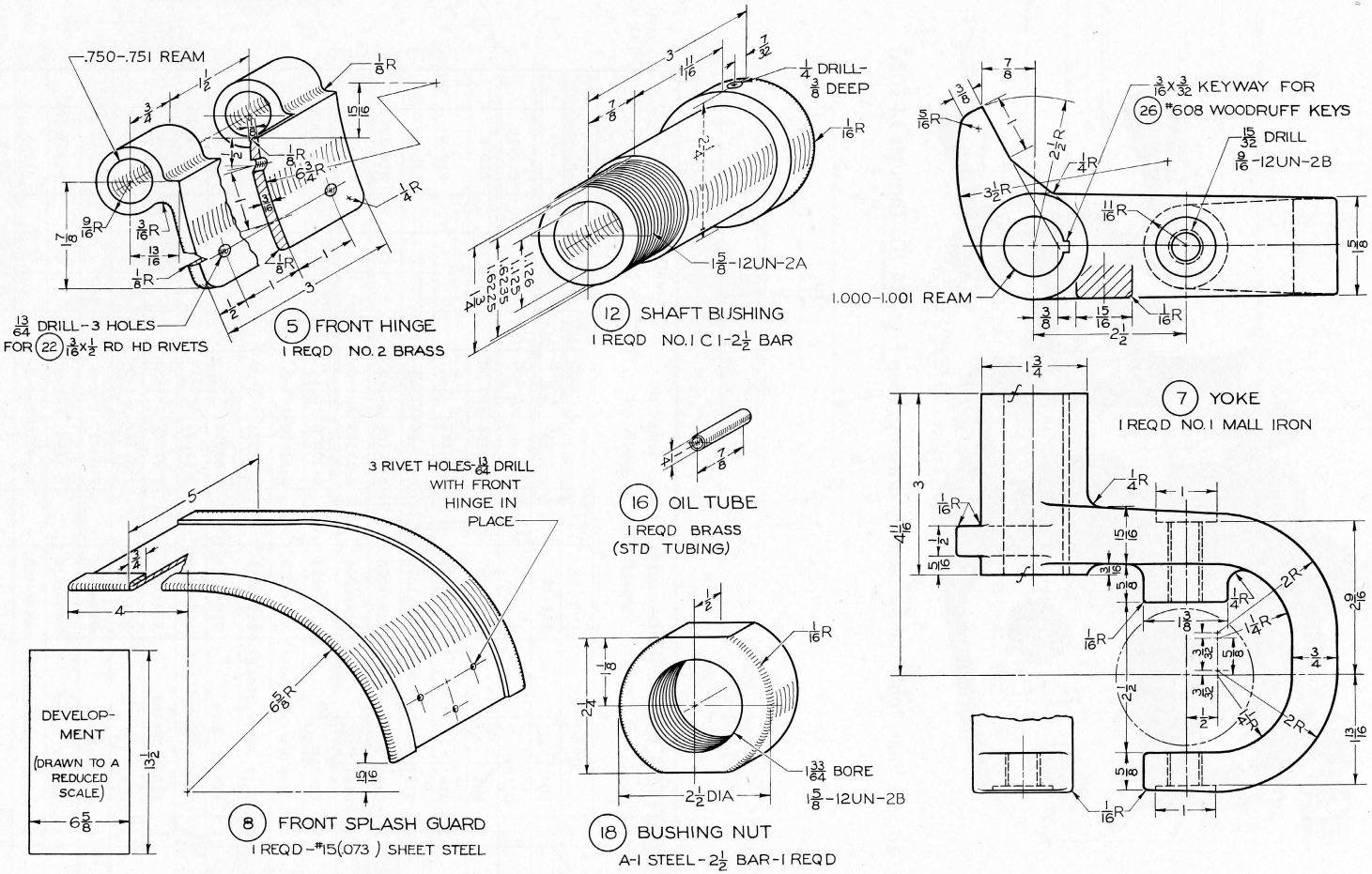

Fig. 14-98 Overhead Pilot Attachment (Continued). See Fig. 14-95 for instructions.
Part No. 7: Revolve given top view 180°; then add front and right-side views.