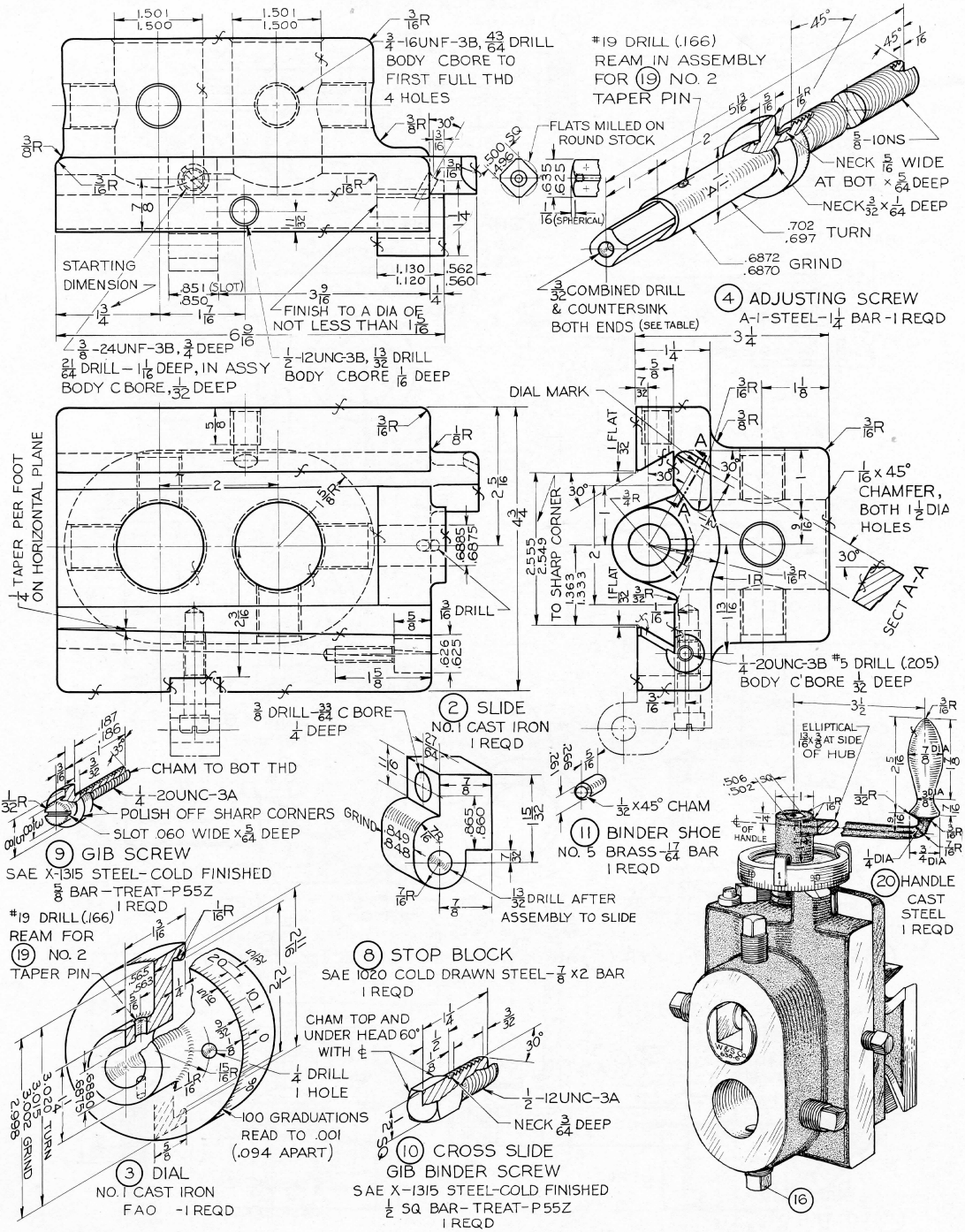

Fig. 14-93 Vertical Slide Tool. (1) Draw details. (2) Draw assembly. Part No. 2: Take given top view as front view in the new drawing; then add top and right-side views. (See also Fig. 14-94.) If assigned, use unidirectional decimal dimensions.

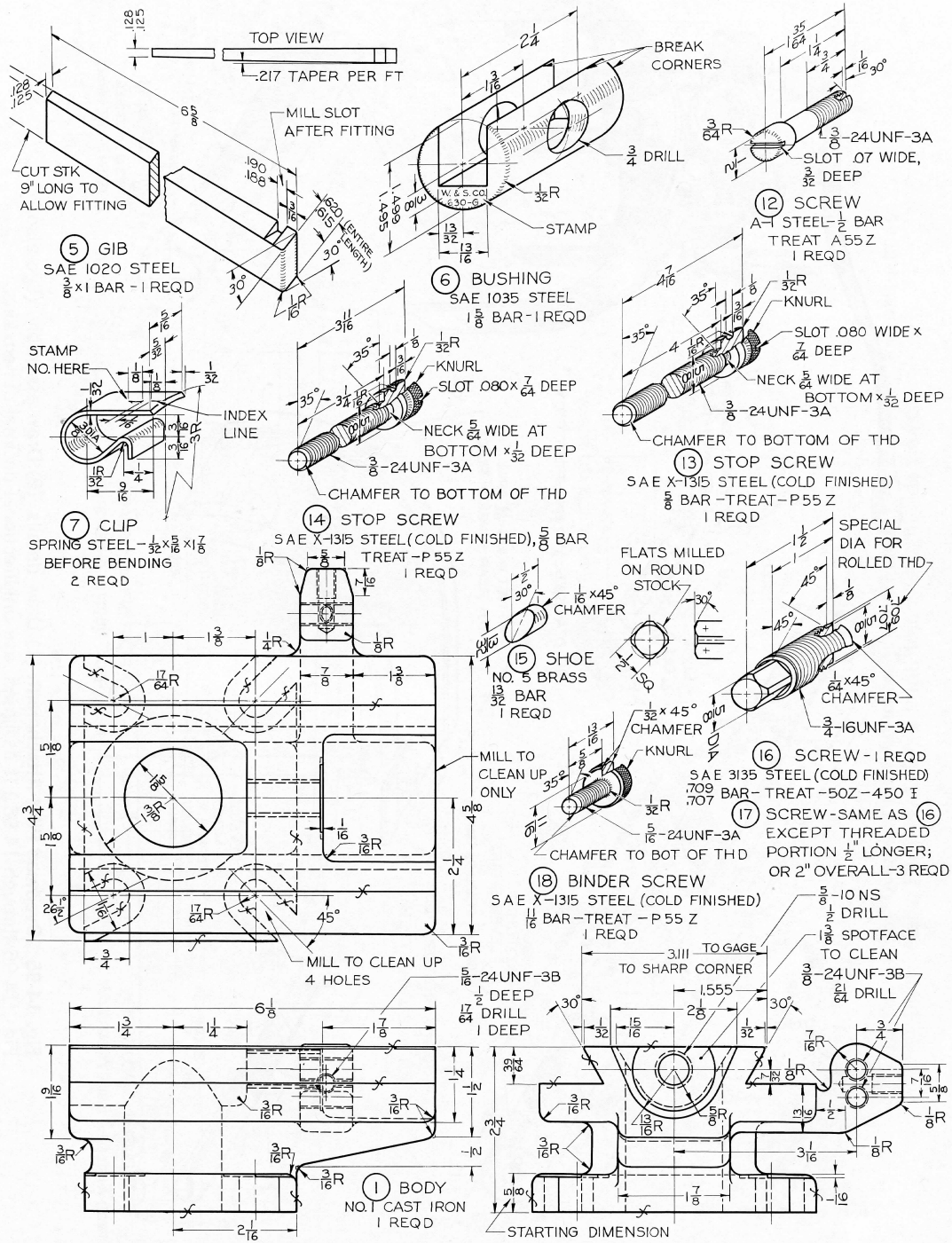

Fig. 14-94 Vertical Slide Tool (Continued). See Fig. 14-93 for instructions. Part No. 1: Take top view as front view in the new drawing; then add top and right-side views.