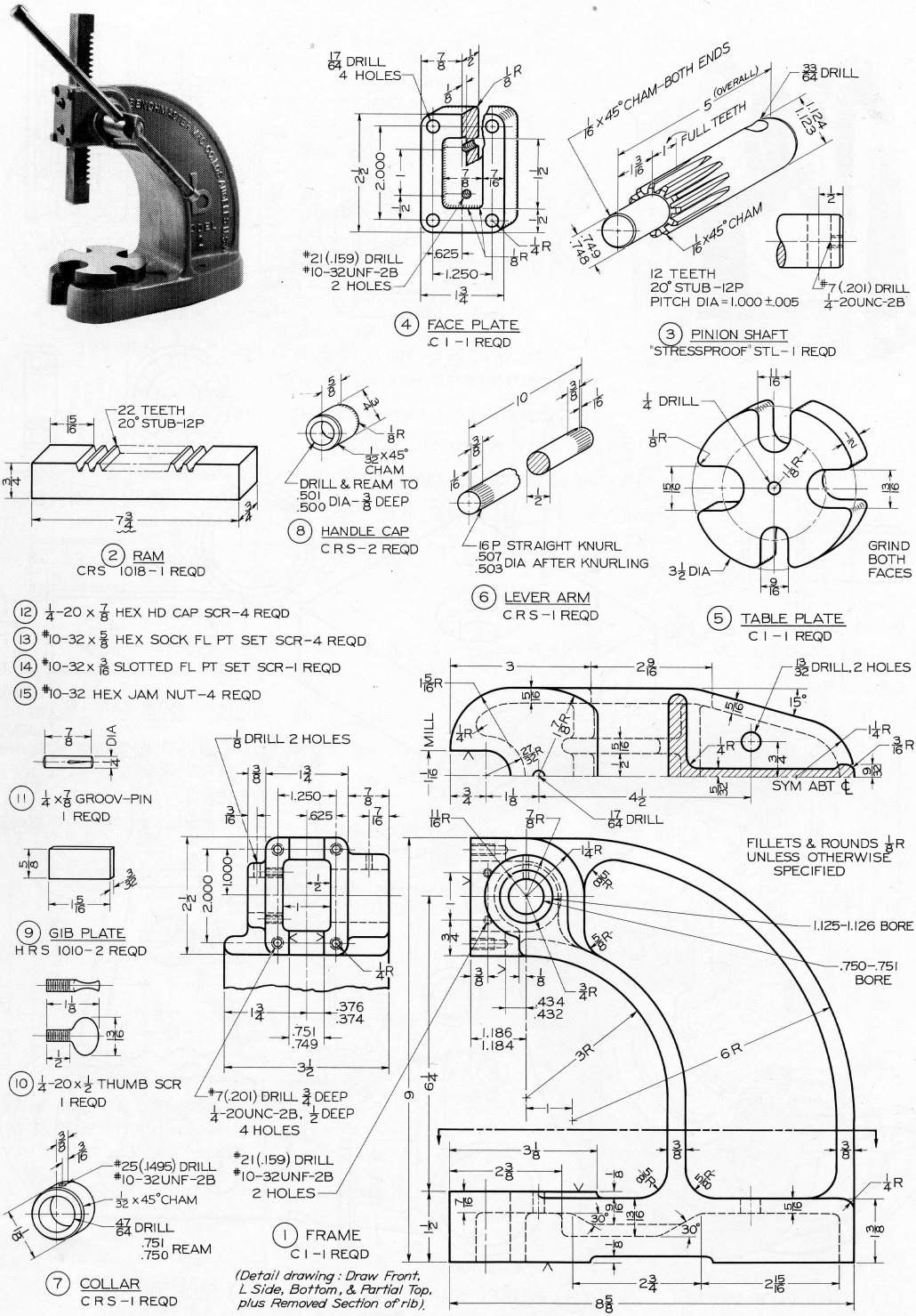

Fig. 14-79 Arbor Press. (1) Draw details. (2) Draw assembly.