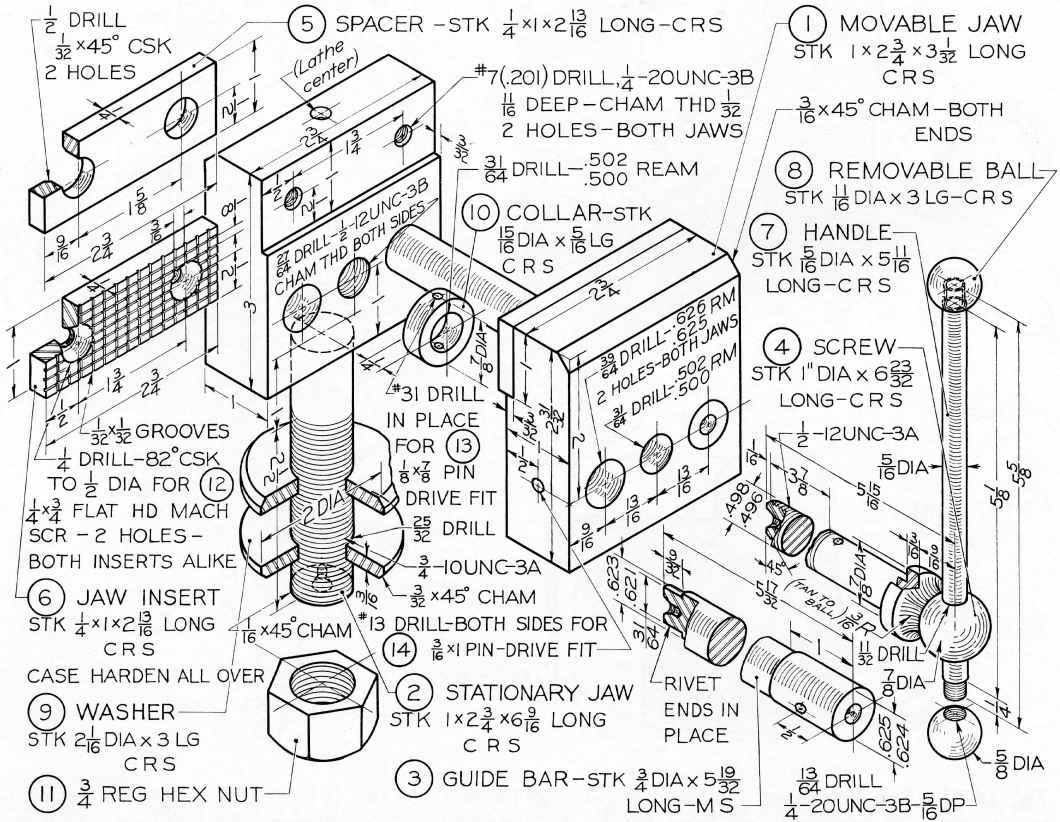

Fig. 14-63 Machinist's Vise. (1) Draw details. (2) Draw assembly. If assigned, use unidirectional two-place decimals for all fractional dimensions.