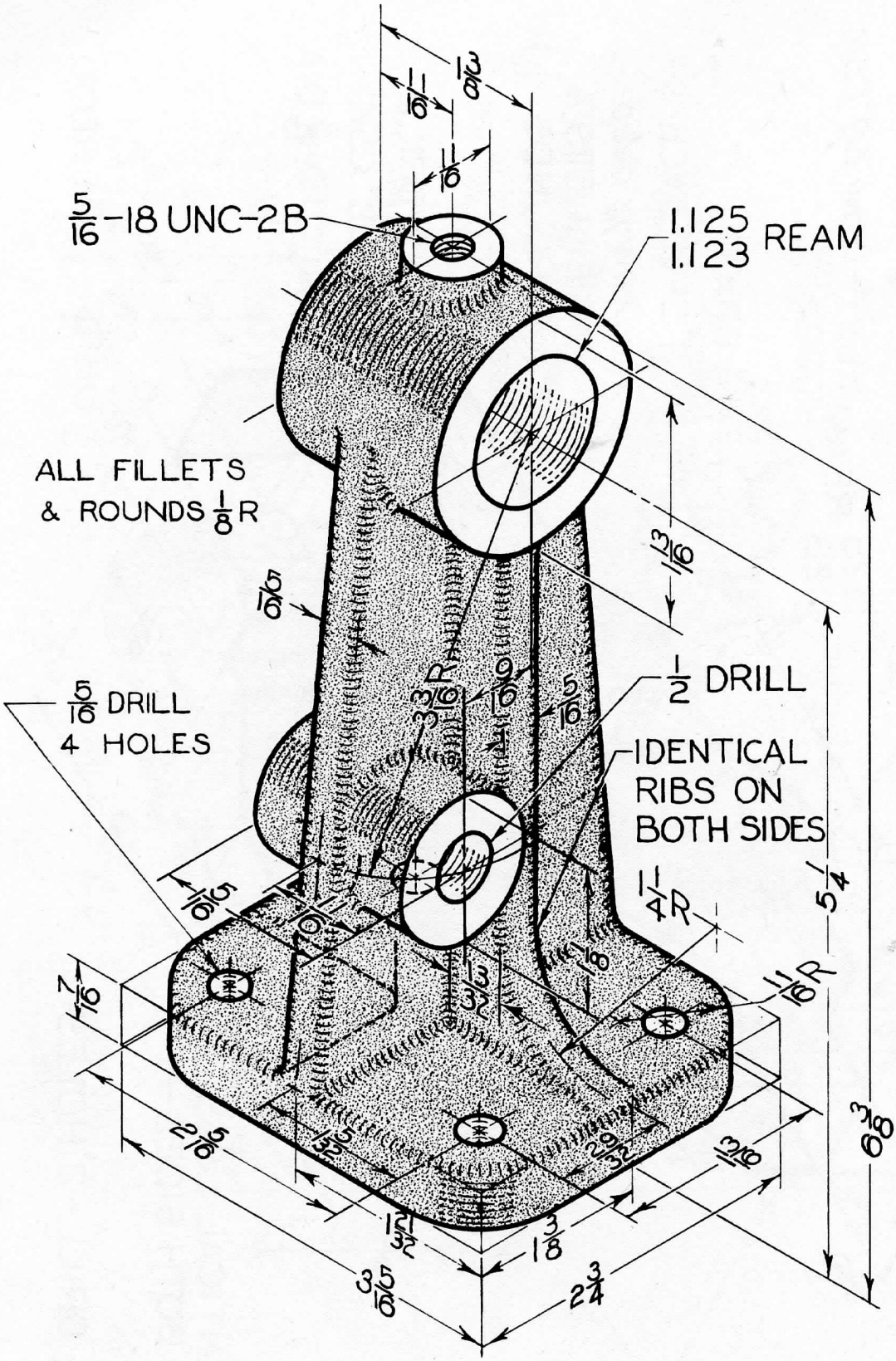

Fig. 6-103 Bearing Bracket. Draw or sketch necessary views (Layout B–3). For threads, see §§13.15 and 13.16.

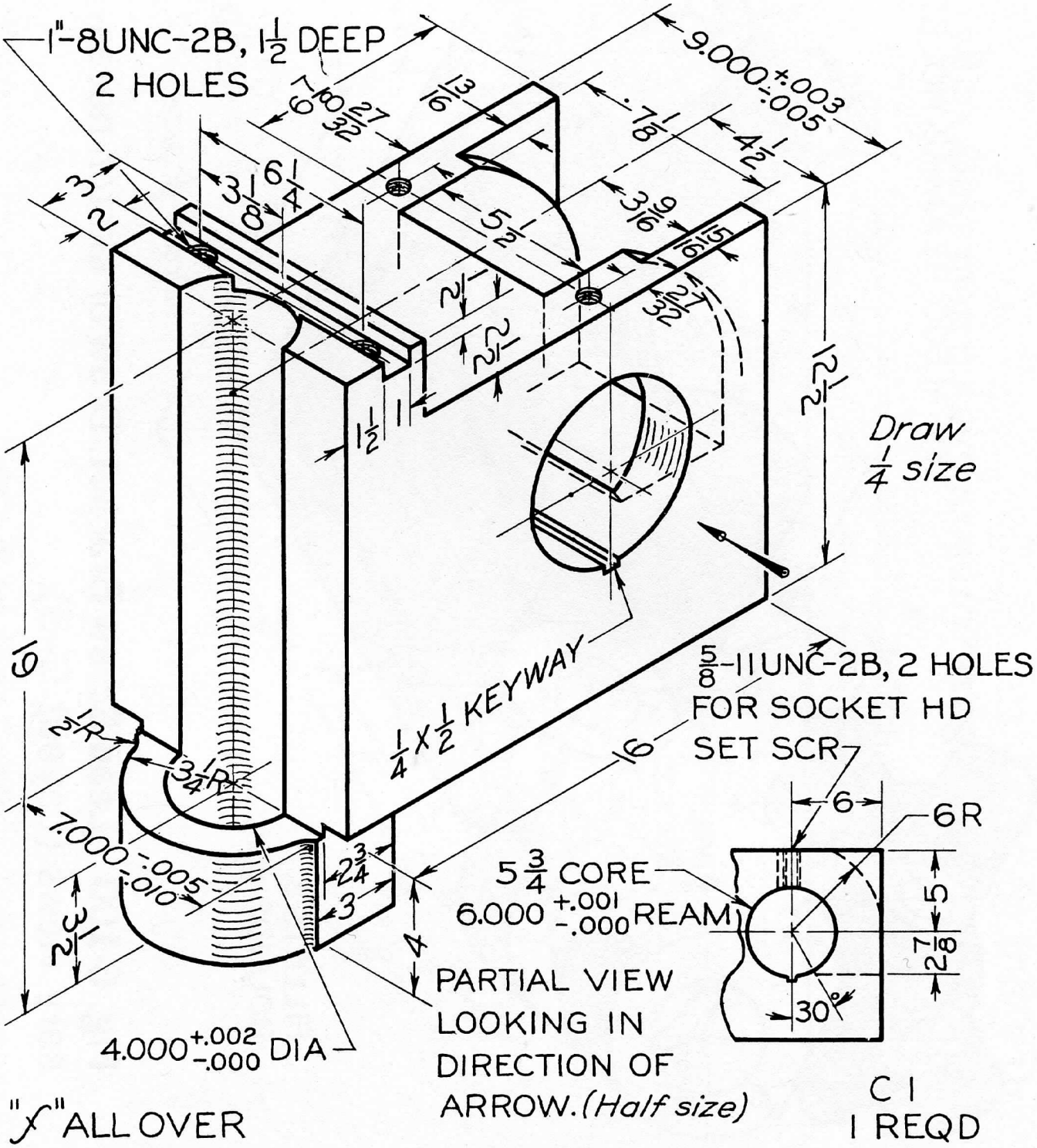

Fig. 6-104 Link Arm Connector. Draw or sketch necessary views (Layout B–3). For threads, see §§13.15 and 13.16.

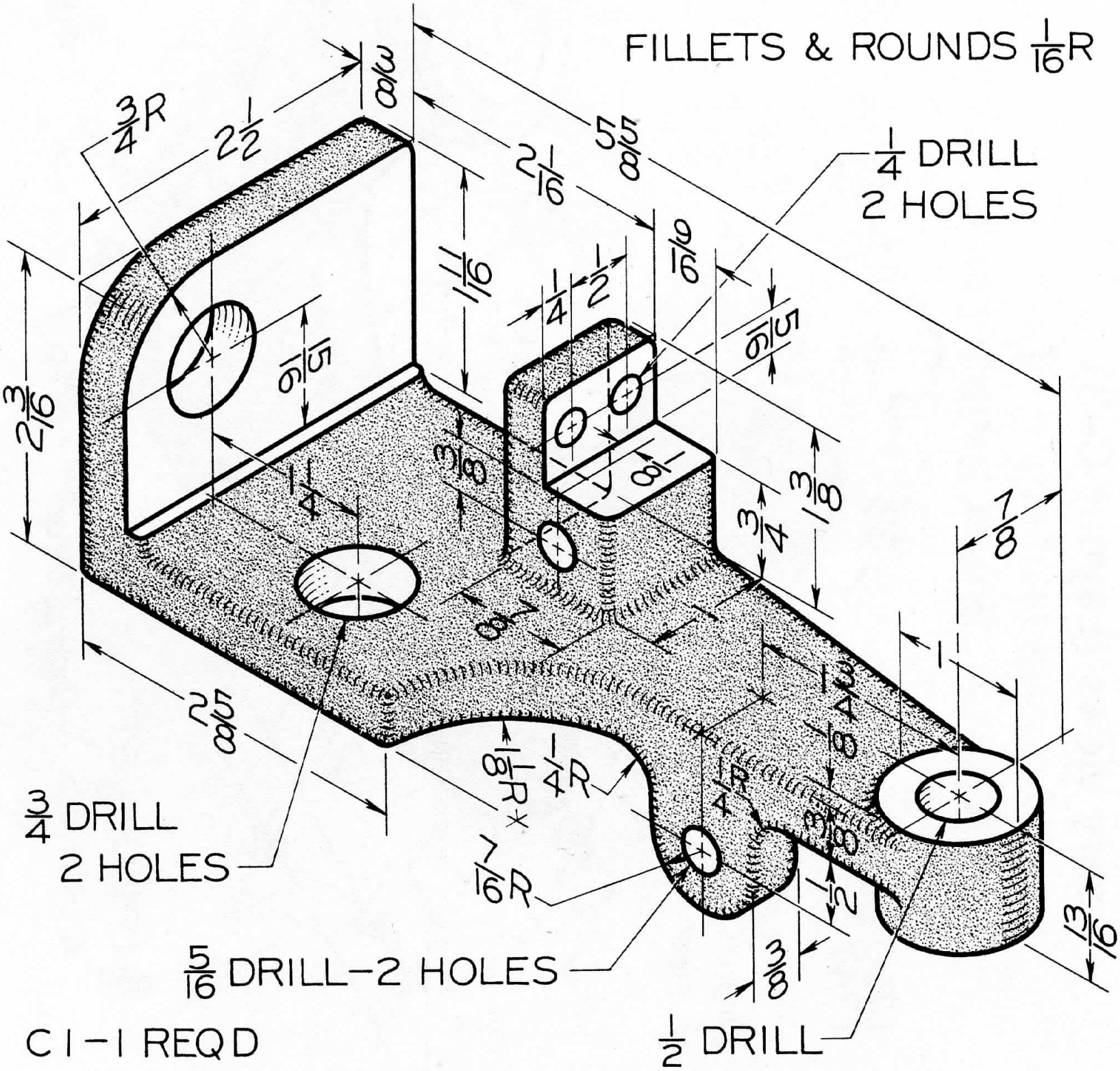

Fig. 6-105 Mounting Bracket. Draw or sketch necessary views (Layout B–3).

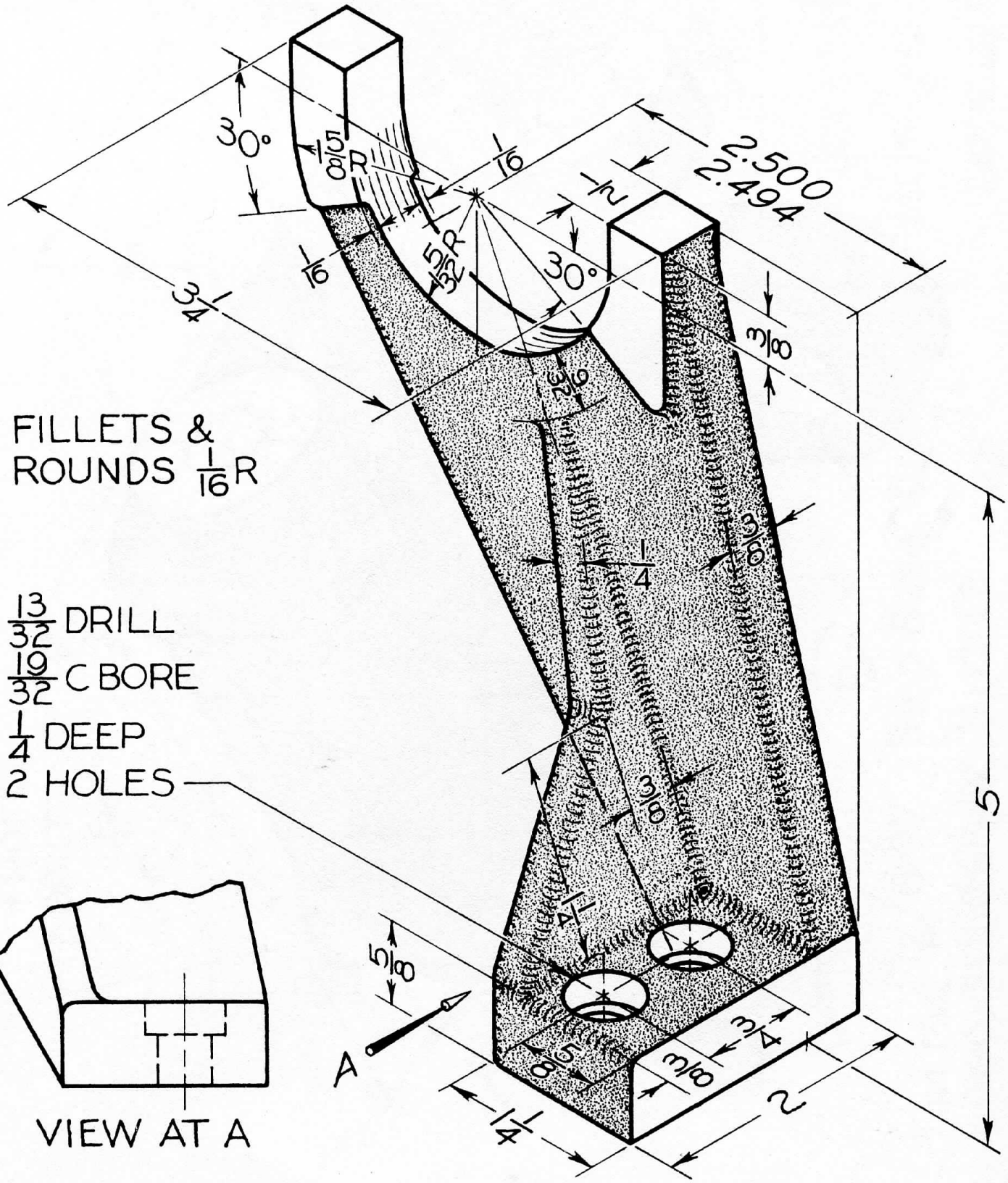

Fig. 6-106 LH Shifter Fork. Draw or sketch necessary views (Layout B–3).