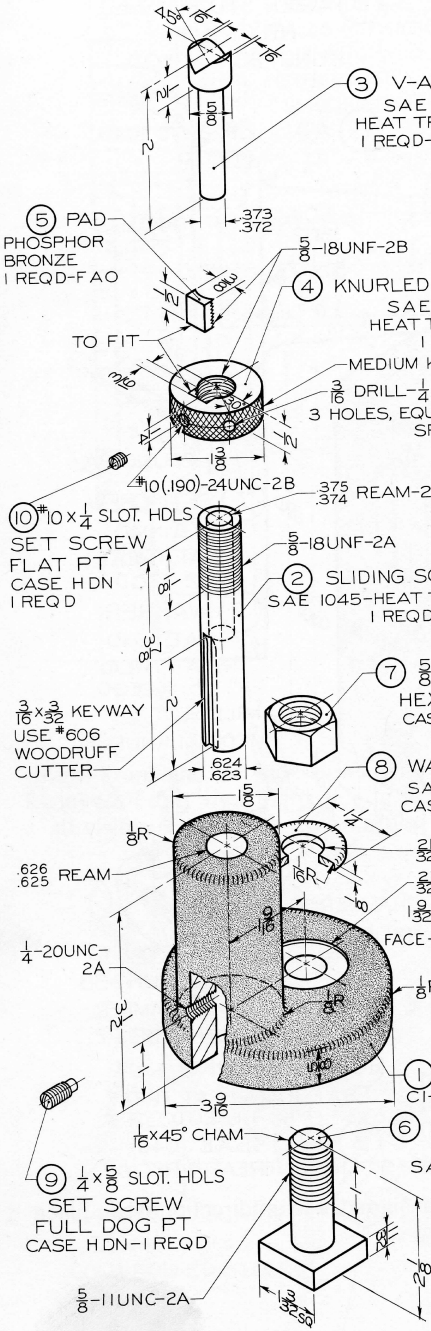

Fig. 14-59 Milling Jack. (1) Draw details. (2) Draw assembly.