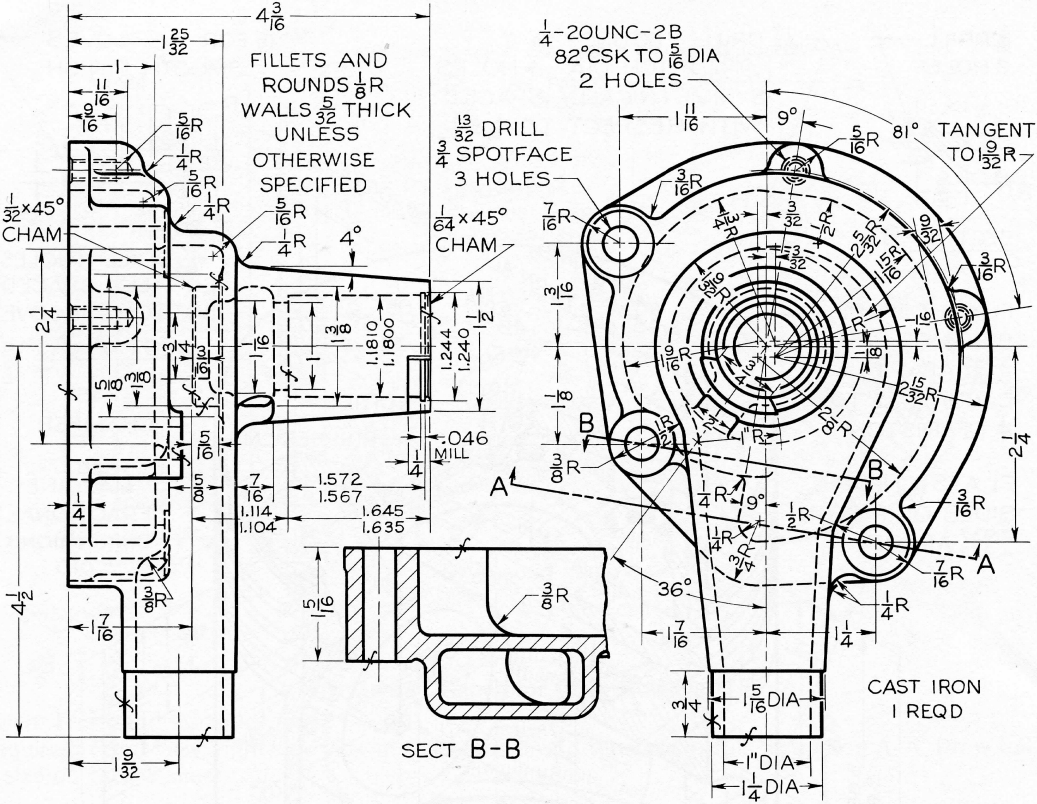

Fig. 14-56 Water Pump Body.

Given: Front and left-side views, with detail section B–B.

Required: Front view, right side in full section, and auxiliary section A–A. Include in section A–A all visible lines behind the cutting plane. Omit section B–B. Draw full size on Size C sheet.