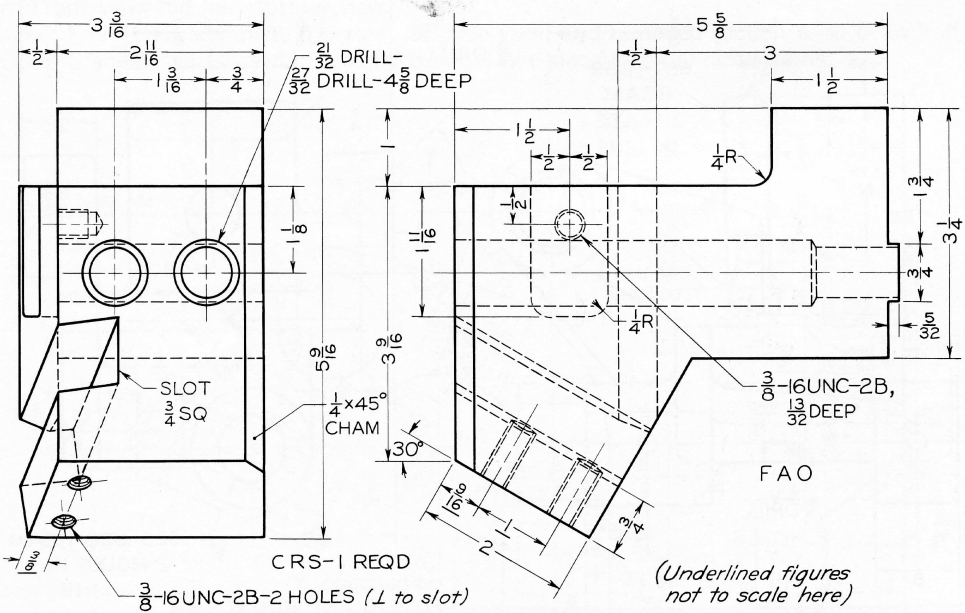

Fig. 14-54 Rear Tool Post.

Given: Front and left-side views.

Required: Take left-side view as new top view; add front and left-side views, approx. $8\frac{1}{2}''$ apart, a primary auxiliary view, then a secondary auxiliary view taken so as to show true end view of $\frac{3}{4}''$ slot. Complete all views, except show only necessary hidden lines in auxiliary views. Draw full size on Size C sheet. Use unidirectional two-place decimal dimensions.