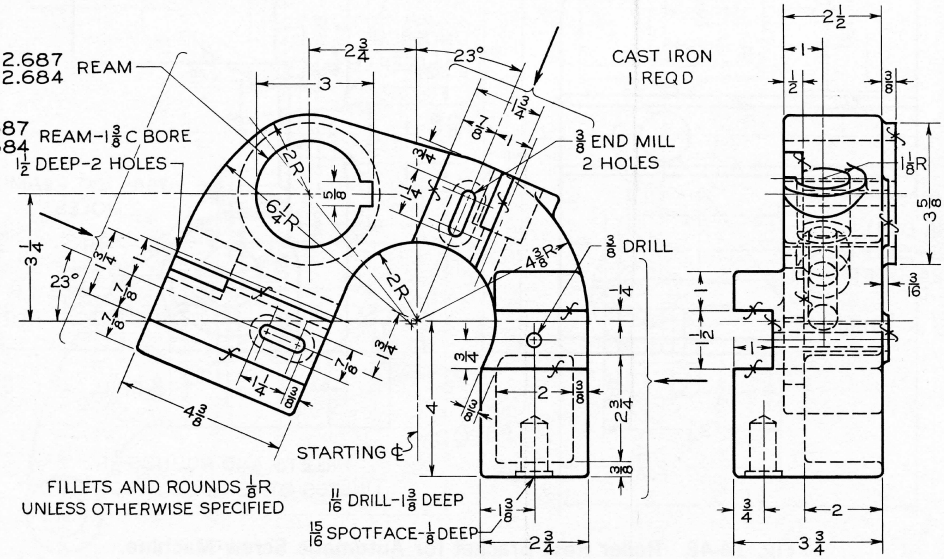

Fig. 14-50 Guide Bracket for Gear Shaper.

Given: Front and right-side views.

Required: Front view, a partial right-side view, and two partial auxiliary views taken in direction of arrows. Draw half size on Size C sheet.