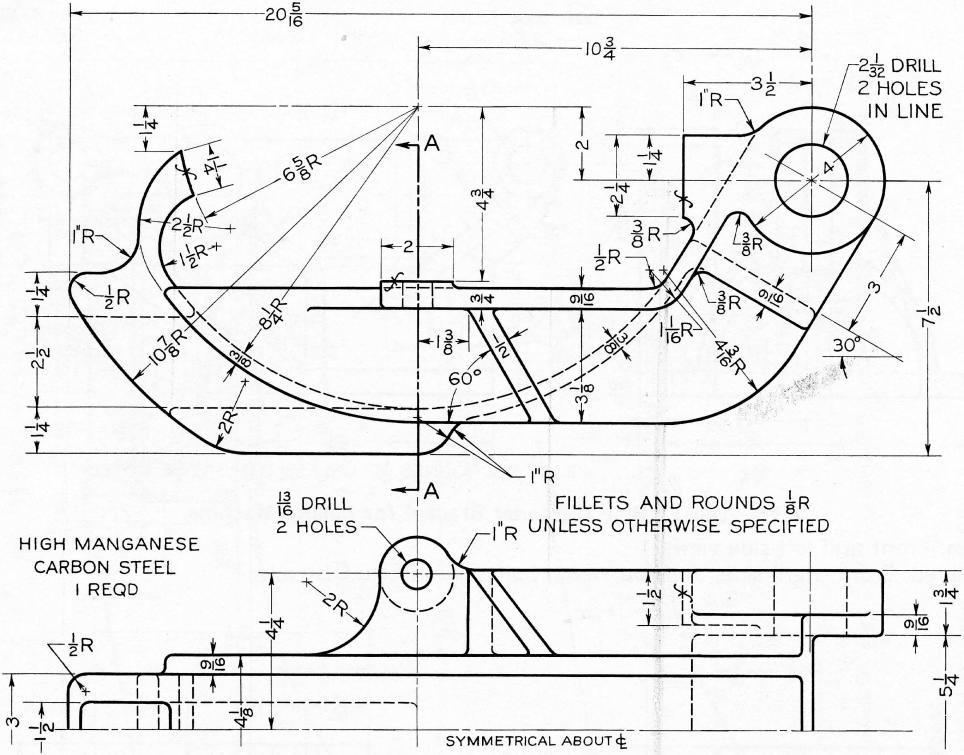

Fig. 14-49 Sheave Guard for Skimmer.

Given: Front view and half bottom view.

Required: Front view, complete top view, left-side view, and removed section A–A. Draw half size on Size C sheet. If assigned, use unidirectional two-place decimal dimensions.