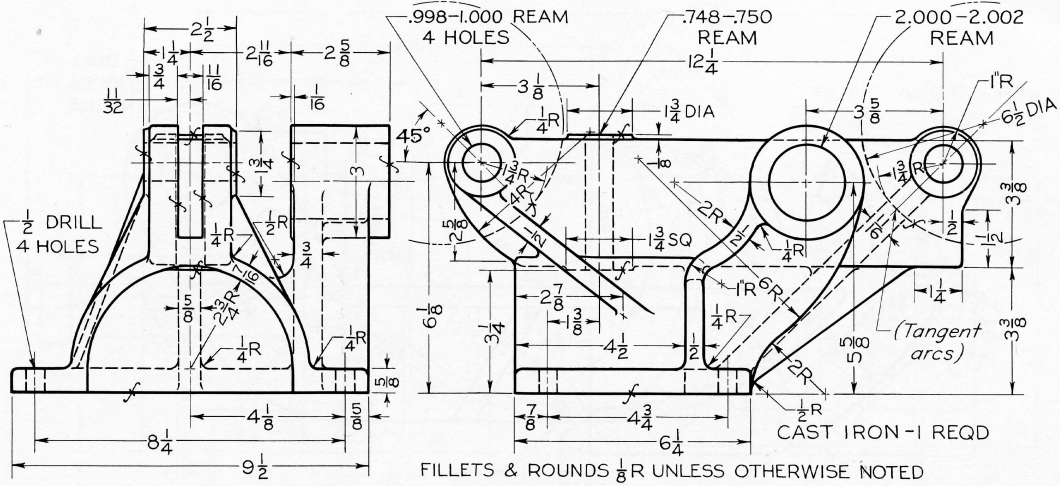

Fig. 14-47 Belt Tightener Bracket for Milling Machine.

Given: Front and left-side views.

Required: Front, right-side, and top views, half size on Size C sheet.