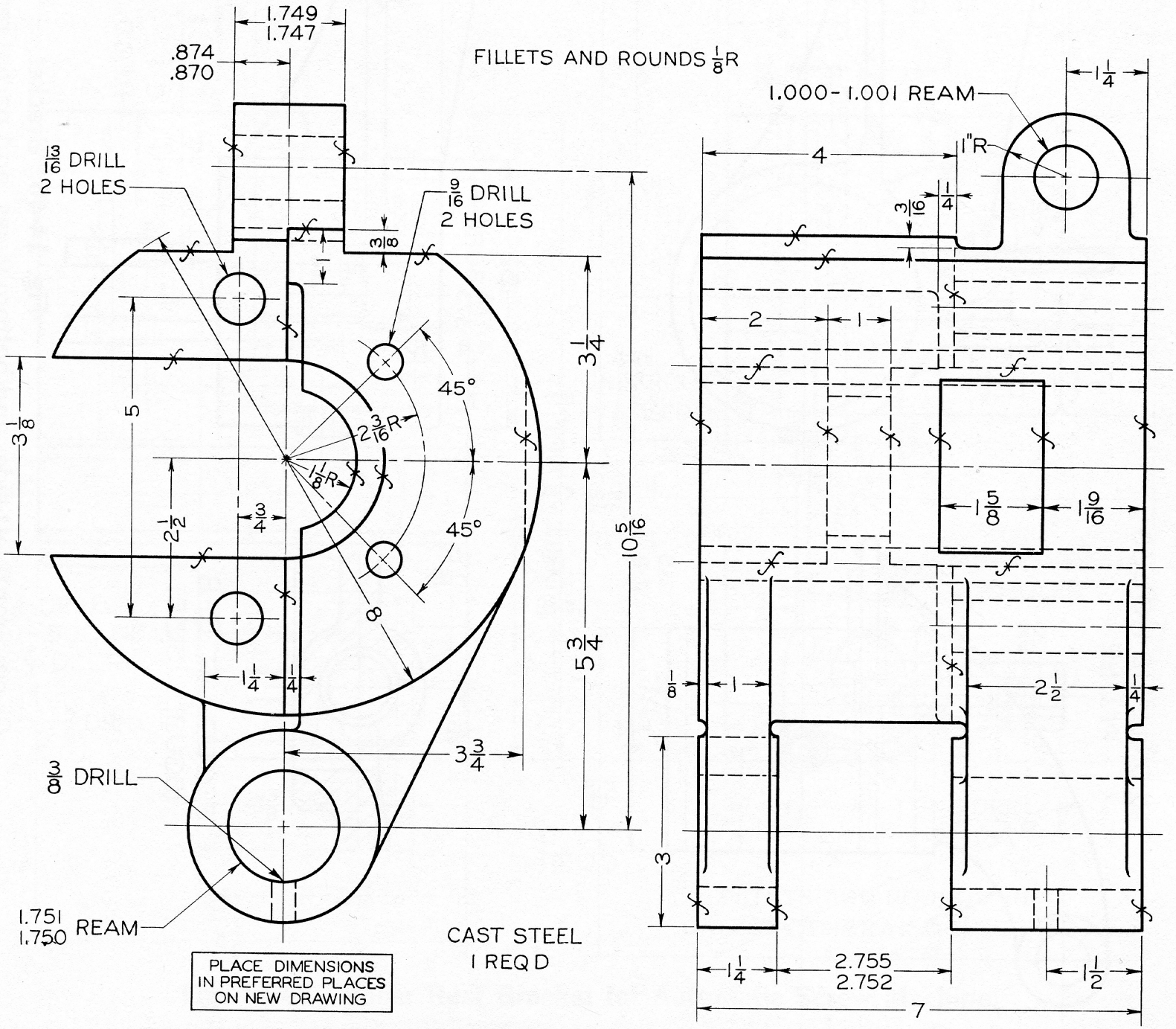

Fig. 14-45 Fixture Base for 60–Ton Vertical Press.

Given: Front and right-side views.

Required: Revolve front view 90° clockwise; then add top and left-side views. Draw half size on Size C sheet. If assigned, use unidirectional two-place decimals for all fractional dimensions.