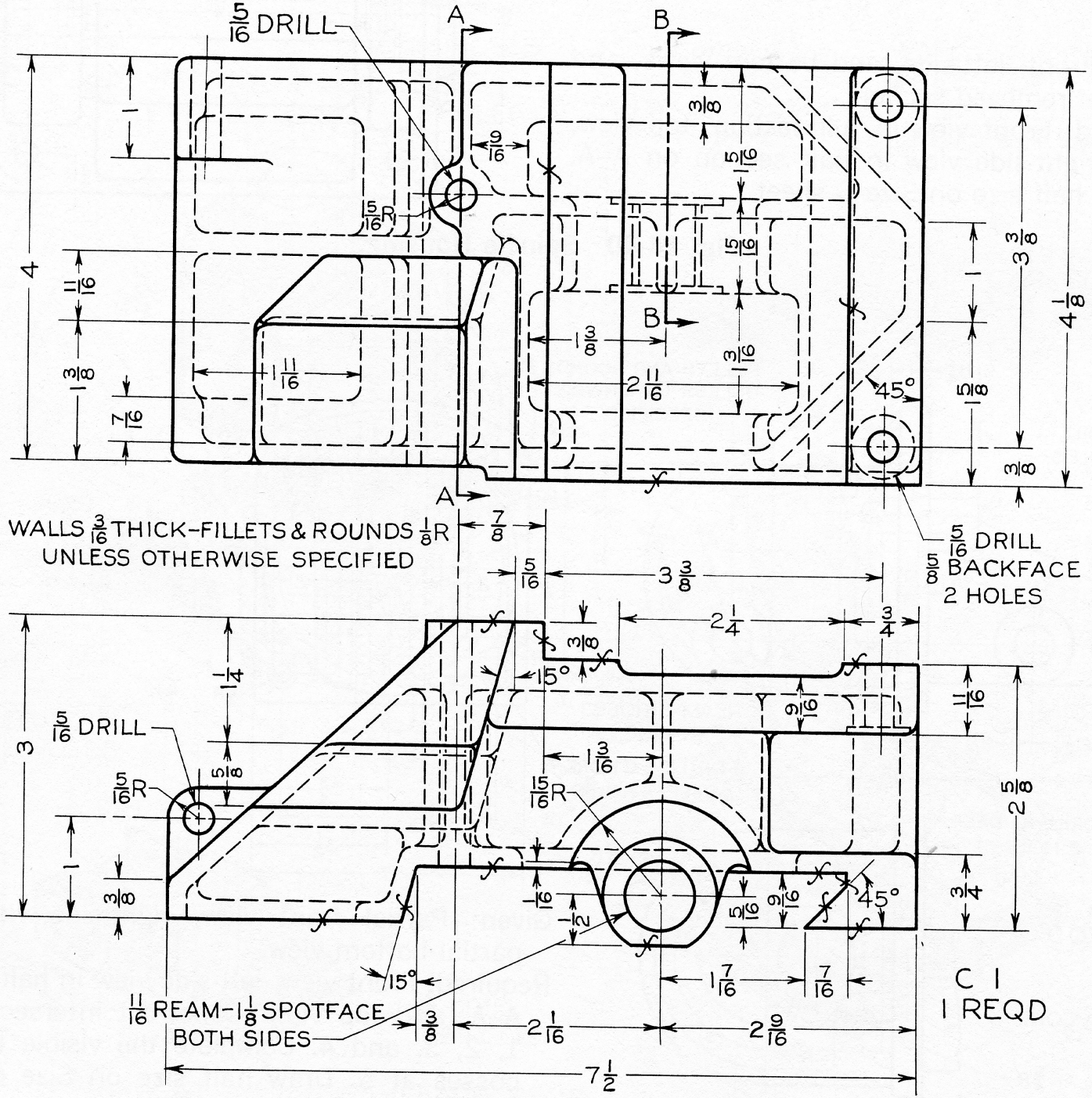

Fig. 14-43 Support Base for Planer.

Given: Front and top views.

Required: Front and top views, left-side view in full section A–A, and removed section B–B. Draw full size on Size C sheet.