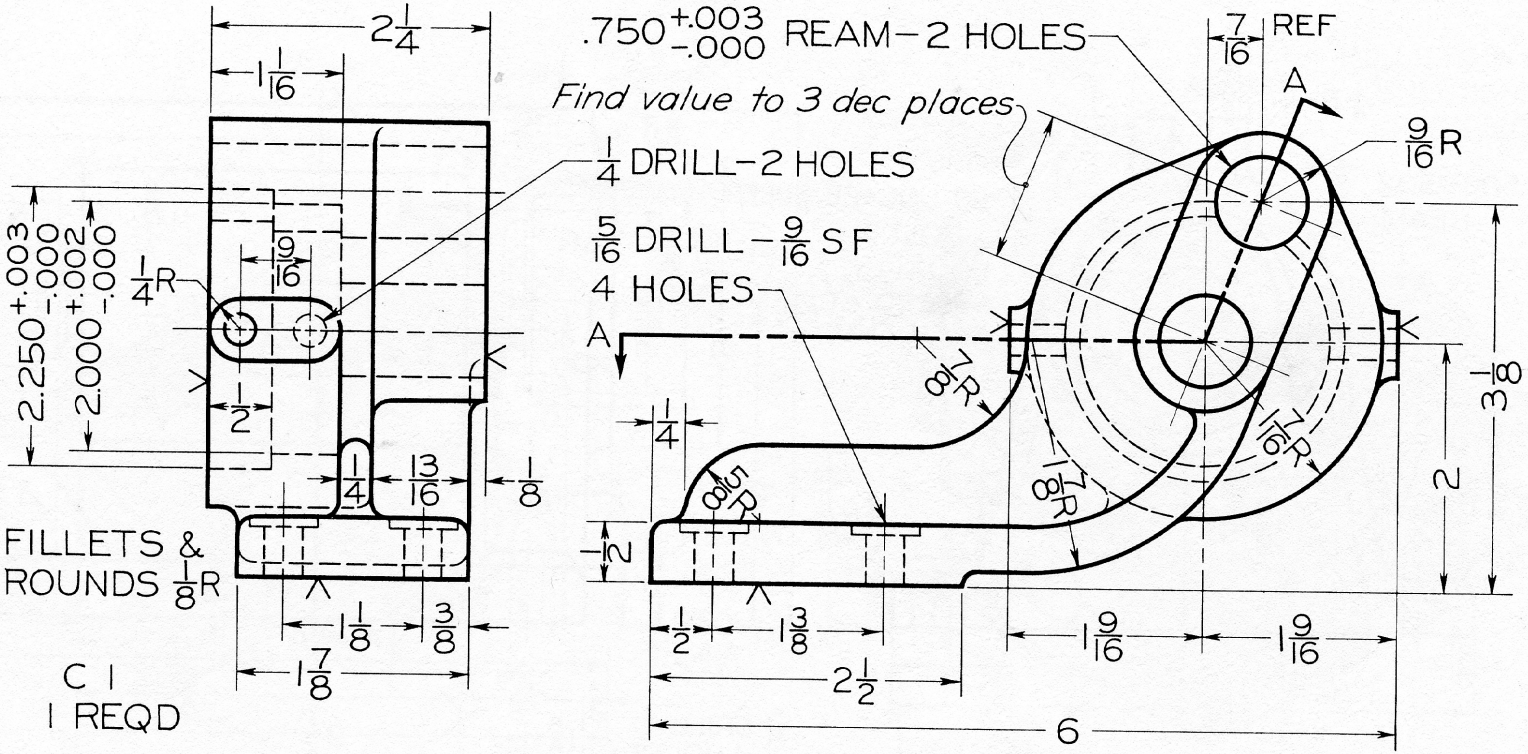

Fig. 14-42 Pump Bracket for a Thread Milling Machine.

Given: Front and left-side views.

Required: Front and right-side views, and top view in section on A–A. Draw full size on Size B sheet.