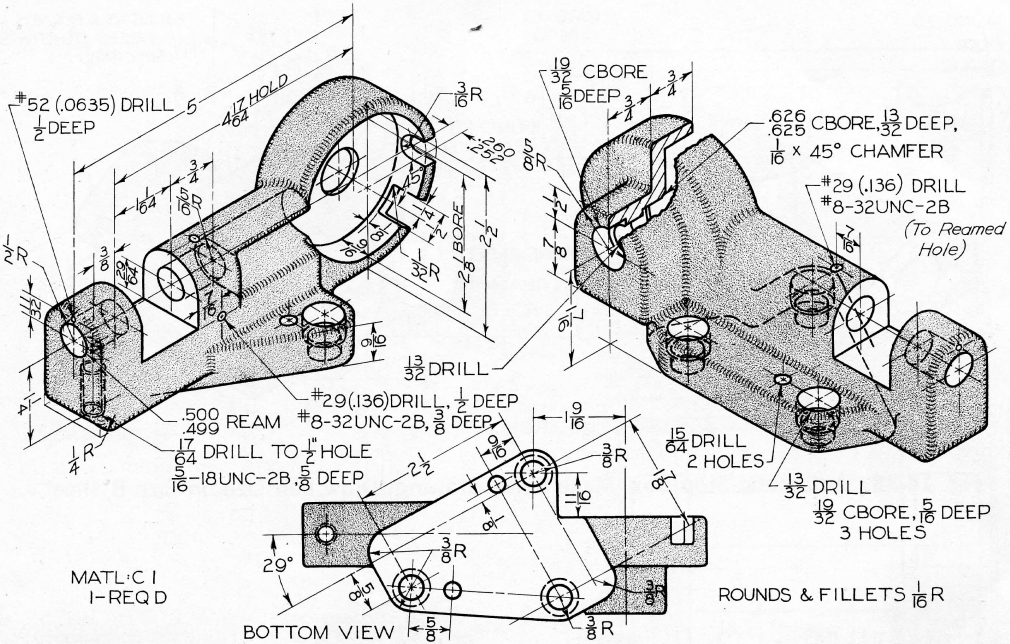

Fig. 14-36 Dial Holder. Make detail drawing. Use Size C sheet.

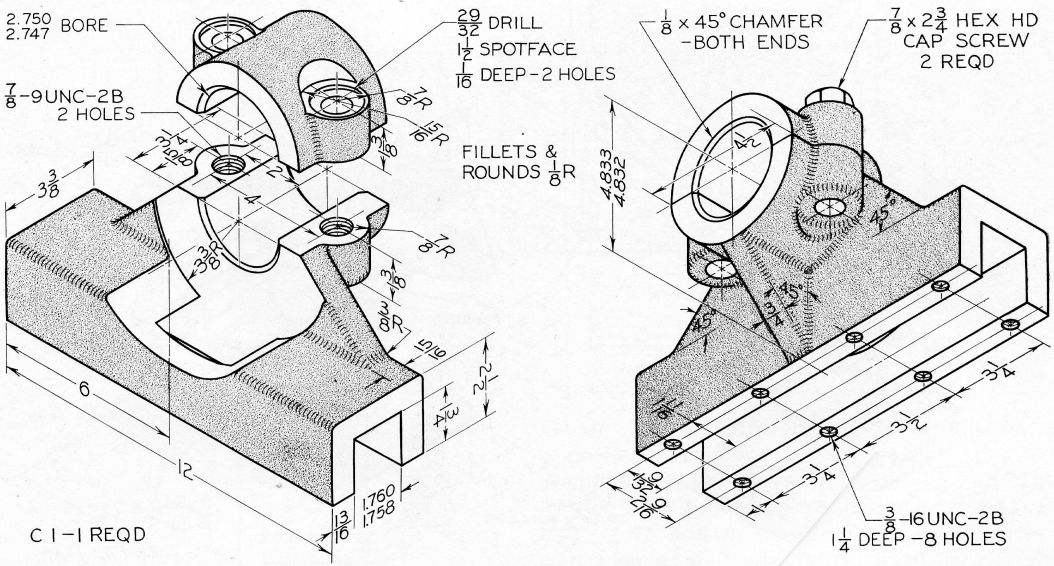

Fig. 14-37 Rack Slide. Make detail drawings. Draw half size on Size B sheet.